RL2250
ASSEMBLY & INSTALLATION GUIDE

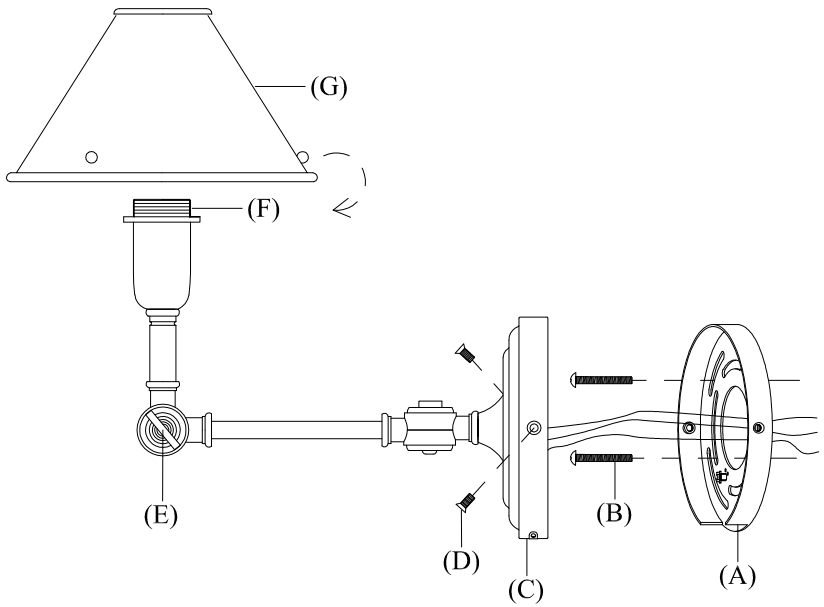

WE RECOMMEND INSTALLATION OF THIS LIGHTING FIXTURE BE DONE BY A LICENSED ELECTRICIAN.

WARNING * SWITCH OFF THE MAIN ELECTRICAL SUPPLY FROM THE MAIN FUSE BOX/CIRCUIT BREAKER BEFORE INSTALLATION.**

INSPECT ITEM CAREFULLY BEFORE ATTEMPTING TO INSTALL. IF THERE IS ANY DAMAGE OR OBVIOUS DEFECT, DO NOT INSTALL.

ITEM MAY NOT BE RETURNED ONCE IT HAS BEEN INSTALLED.

---

1. Attach ground (green) wire to ground wire from wall outlet box (usually green or copper in color), fasten together with a plastic wire connector. Tightly wrap the wire connector with electrical tape so the end of the connector is sealed. IT IS IMPERATIVE THAT THE OUTLET BOX IN YOUR HOME BE PROPERLY GROUNDED.
2. Connect neutral (white) fixture wire coming from fixture base to neutral (usually white) outlet wire. Fasten both wires together with a plastic wire connector and tightly wrap the wire connector with electrical tape.
3. Repeat the procedure with the hot (black) wires. Always make sure that no wire strands are left outside the connectors. DO NOT REVERSE THE HOT AND NEUTRAL CONNECTIONS OTHERWISE SAFETY WILL BE COMPROMISED.
4. Remove mounting plate (A) from fixture base (C) by removing base screws (D).
5. Affix mounting plate (A) to wall outlet box with mounting screws (B) provided.
6. Attach fixture base (C) to mounting plate (A) and tighten with base screws (D).
7. Attach lamp shade (G) to top threaded section of socket housing (F) by turning (G) in clockwise directions.
8. Insert light bulb into socket.
9. ADJUSTMENT INSTRUCTIONS
   1. Loosen adjustment key (E).
   2. Adjust the socket (F) to desired position.
   3. Tighten the adjustment key (E).

RALPH LAUREN