RL2551
ASSEMBLY & INSTALLATION GUIDE

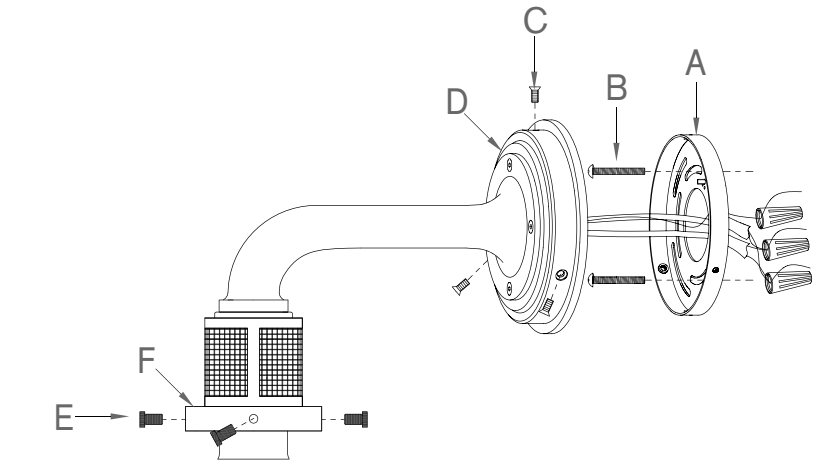

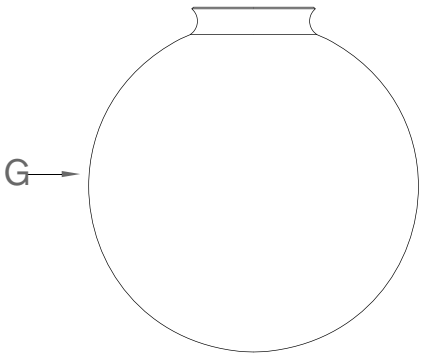

INSPECT ITEM CAREFULLY BEFORE ATTEMPTING TO INSTALL. IF THERE IS ANY DAMAGE OR OBVIOUS DEFECT, DO NOT INSTALL.

ITEM MAY NOT BE RETURNED ONCE IT HAS BEEN INSTALLED.

---

1. Carefully remove all parts from the carton.
2. Remove mounting plate (A) from base of light fixture (D) by removing base screws (C) in counter-clockwise direction.
3. Affix mounting plate (A) to wall outlet box with mounting screws (B) provided.
4. Attach ground (green) wire to ground wire from wall outlet box (usually green or copper in color), fasten together with a plastic wire connector. Tighten wrap the wire connecto with electrical tape. so the end of the connector is sealed. IT IS IMPERATIVE THAT THE OUTLET BOX IN YOUR HOME BE PROPERLY GROUNDED.
5. Connect neutral (white) fixture wire coming from fixture base to neutral (usually white) outlet wire. Fasten both wires together with a plastic wire connector and tightly wrap the wire conncetor with electrical tape.
6. Repeat the procedure with the hot (black) wires. Always make sure that no wire strands are left outside the connectors. DO NOT REVERSE THE HOT AND NEUTRAL CONNECTIONS OTHERWISE SAFETY WILL BE COMPROMISED.
7. Attach fixture base (D) to the affixed mounting plate (A) and tighten with base screws (C).
8. Insert light bulb (not included) watt into socket.
9. Loosen thumbscrews (E), insert glass shades (G) into shade holder (F) and secure by tightening thumbscrews (E). DO NOT OVERTIGHTEN OTHERWISE GLASS WILL BE DAMAGE.

*** Clean with a dry, soft cloth only. Do not use harsh abrasives or chemical agents.

Intertek DAMP

RALPH LAUREN