ASSEMBLY INSTRUCTIONS

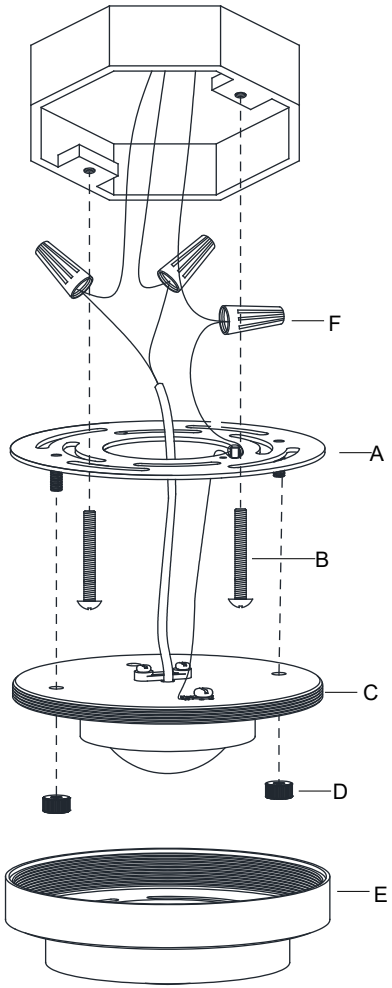

Grant 4.5" Solitaire Flush Mount
Item # RL 4127

WE RECOMMEND INSTALLATION OF THIS LIGHTING FIXTURE BE DONE BY A LICENSED ELECTRICIAN.
WARNING*SWITCH OFF THE MAIN ELECTRICAL SUPPLY FROM THE MAIN FUSE BOX/CIRCUIT BREAKER BEFORE INSTALLATION.**
INSPECT ITEM CAREFULLY BEFORE ATTEMPTING TO INSTALL. IF THERE IS ANY DAMAGE OR OBVIOUS DEFECT. DO NOT INSTALL.
ITEM MAY NOT BE RETURNED ONCE IT HAS BEEN INSTALLED.
NOTE: CAREFULLY UNPACK EACH PIECE IN TOP LAYER OF PACKING PRIOR TO REMOVING. RETAIN ALL PACKING MATERIAL UNTIL INSPECTION AND INSTALLATION ARE FINAL.

---

1. Carefully remove all parts from the box.
2. Remove the fixture shade (E) from the fixture body (C) by screwing counter-clockwise
3. Remove the mounting plate (A) from the fixture body (C) by loosening the knurled knobs (D).
4. Install the mounting plate (A) to the junction box with the mounting screws (B) provided.
5. Wrap the fixture ground wire to the green ground screw on the mounting plate (A) and secure,then connect to the ground wire in the junction box using the wire nut (F).
   IT IS IMPERATIVE THAT THIS FIXTURE BE GROUNDED.
6. Connect the fixture white wire to the neutral wire in the junction box using the wire nut (F).
7. Connect the fixture black wire to the hot wire in the junction box using the wire nut F).
   DO NOT REVERSE THE HOT AND NEUTRAL CONNECTIONS OTHERWISE SAFETY WILL BE COMPROMISED.
8. Tuck the wire connections neatly into the junction box.
9. Attach the fixture body (C) to the mounting plate (A) and secure with the knurled knobs (D).
10. Install the fixture shade (E) to the fixture body (C) by turning clockwise until secure.
11. Installation is complete, turn on power at fuse or circuit breaker.

***Clean with a dry, soft cloth only. Use no harsh abrasives or chemical agents.

Intertek

RALPH LAUREN